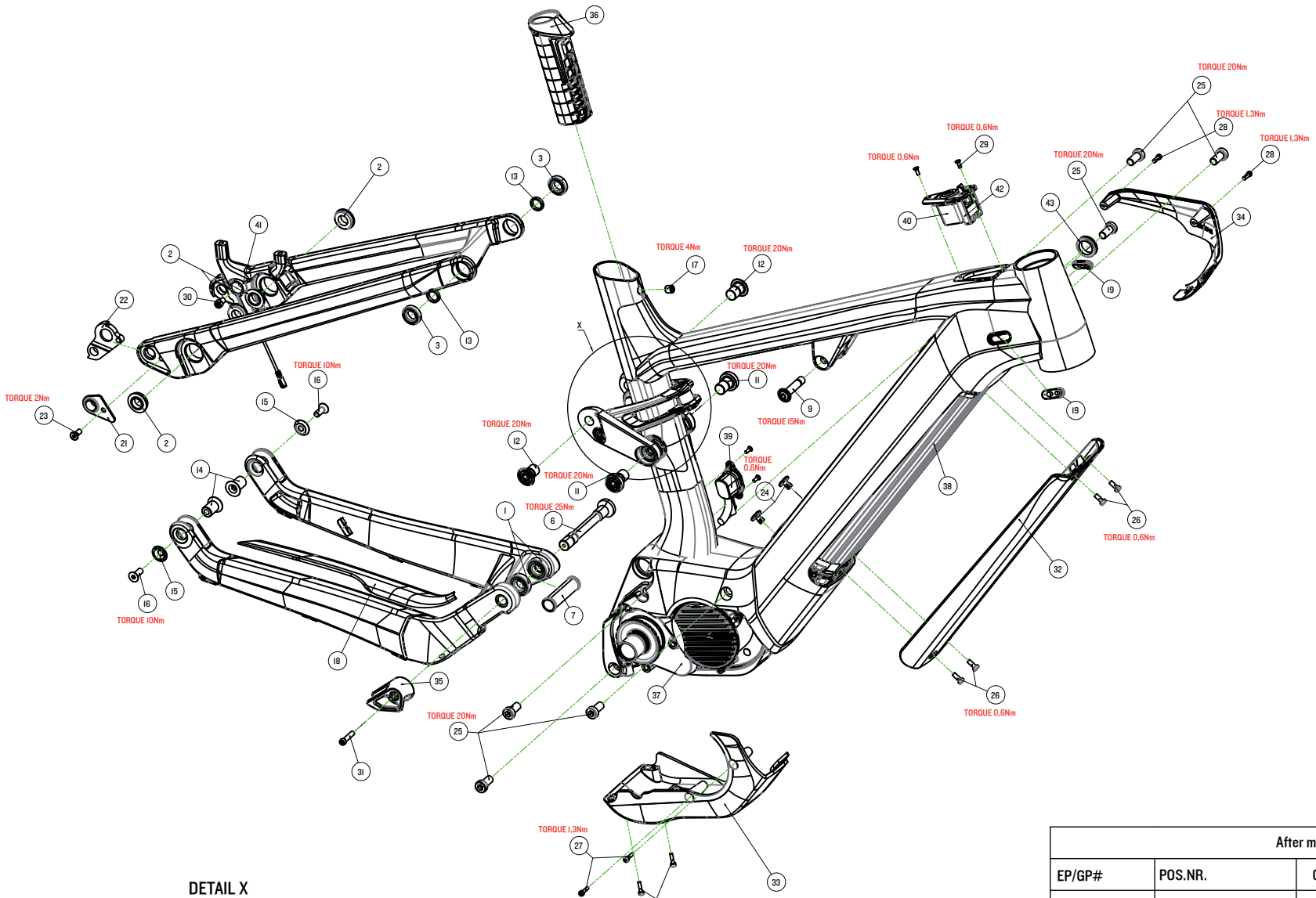

DETAIL X

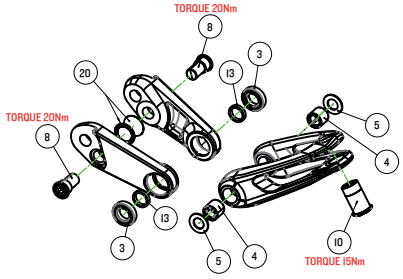

After market products				
EP/GP#	POS.NR.	QTY.	DESPRIPTION	CANYON#
GP0155-01	22 (EP0786-01), 23	1x 1x	RD-Hanger Kit Sram	10001125
GP0156-01	22 (EP0787-01), 23	1x 1x	RD-Hanger Kit Shimano	10001126

NEURON:ON | M096-01

REVISION 00 | 18.03.2020